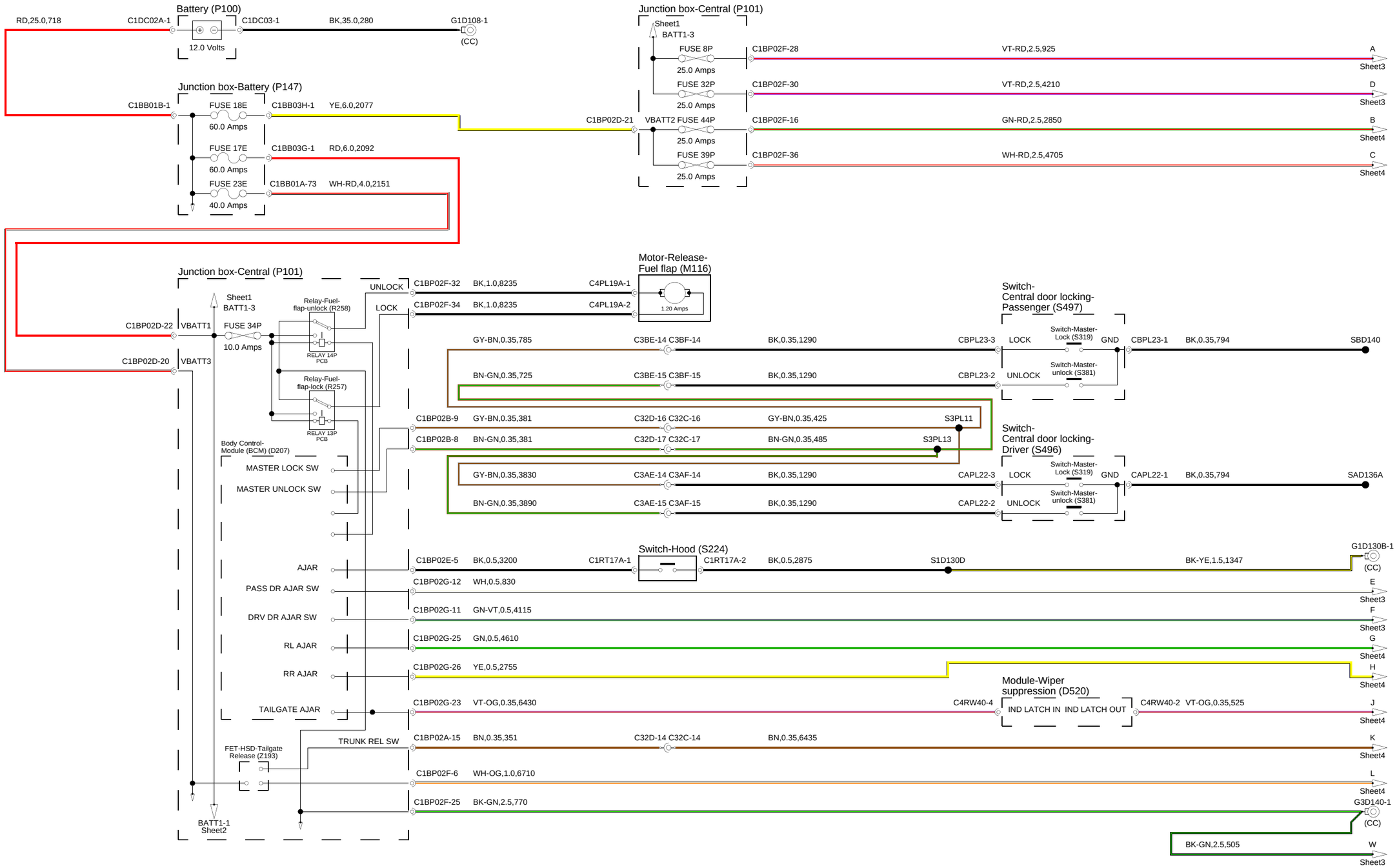
Battery (P100)
RD,25.0,718
C1DC02A-1
C1DC03-1
BK,35.0,280
G1D108-1
(CC)
12.0 Volts
Junction box-Battery (P147)
C1BB01B-1
FUSE 18E
60.0 Amps
C1BB03H-1
YE,6.0,2077
FUSE 17E
60.0 Amps
C1BB03G-1
RD,6.0,2092
FUSE 23E
40.0 Amps
C1BB01A-73
WH-RD,4.0,2151
Junction box-Central (P101)
Sheet1
BATT1-3
C1BP02D-21
VBATT2
FUSE 8P
25.0 Amps
C1BP02F-28
VT-RD,2.5,925
A
Sheet3
FUSE 32P
25.0 Amps
C1BP02F-30
VT-RD,2.5,4210
D
Sheet3
FUSE 44P
25.0 Amps
C1BP02F-16
GN-RD,2.5,2850
B
Sheet4
FUSE 39P
25.0 Amps
C1BP02F-36
WH-RD,2.5,4705
C
Sheet4
Junction box-Central (P101)
Sheet1
BATT1-3
C1BP02D-22
VBATT1
FUSE 34P
10.0 Amps
C1BP02D-20
VBATT3
Relay-Fuel-flap-unlock (R258)
RELAY 14P PCB
Relay-Fuel-flap-lock (R257)
RELAY 13P PCB
UNLOCK
LOCK
Motor-Release-Fuel flap (M116)
C1BP02F-32
BK,1.0,8235
C4PL19A-1
C1BP02F-34
BK,1.0,8235
C4PL19A-2
1.20 Amps
Switch-Central door locking-Passenger (S497)
GY-BN,0.35,785
C3BE-14 C3BF-14
BK,0.35,1290
CBPL23-3
LOCK
Switch-Master-Lock (S319)
GND
CBPL23-1
BK,0.35,794
SBD140
BN-GN,0.35,725
C3BE-15 C3BF-15
BK,0.35,1290
CBPL23-2
UNLOCK
Switch-Master-unlock (S381)
C1BP02B-9
GY-BN,0.35,381
C32D-16 C32C-16
GY-BN,0.35,425
S3PL11
C1BP02B-8
BN-GN,0.35,381
C32D-17 C32C-17
BN-GN,0.35,485
S3PL13
Switch-Central door locking-Driver (S496)
GY-BN,0.35,3830
C3AE-14 C3AF-14
BK,0.35,1290
CAPL22-3
LOCK
Switch-Master-Lock (S319)
GND
CAPL22-1
BK,0.35,794
SAD136A
BN-GN,0.35,3890
C3AE-15 C3AF-15
BK,0.35,1290
CAPL22-2
UNLOCK
Switch-Master-unlock (S381)
Body Control-Module (BCM) (D207)
MASTER LOCK SW
MASTER UNLOCK SW
AJAR
PASS DR AJAR SW
DRV DR AJAR SW
RL AJAR
RR AJAR
TAILGATE AJAR
TRUNK REL SW
FET-HSD-Tailgate Release (Z193)
BATT1-1
Sheet2
Switch-Hood (S224)
C1BP02E-5
BK,0.5,3200
C1RT17A-1
C1RT17A-2
BK,0.5,2875
S1D130D
BK-YE,1.5,1347
G1D130B-1
(CC)
C1BP02G-12
WH,0.5,830
E
Sheet3
C1BP02G-11
GN-VT,0.5,4115
F
Sheet3
C1BP02G-25
GN,0.5,4610
G
Sheet4
C1BP02G-26
YE,0.5,2755
H
Sheet4
Module-Wiper suppression (D520)
C1BP02G-23
VT-OG,0.35,6430
C4RW40-4
IND LATCH IN
IND LATCH OUT
C4RW40-2
VT-OG,0.35,525
J
Sheet4
C1BP02A-15
BN,0.35,351
C32D-14 C32C-14
BN,0.35,6435
K
Sheet4
C1BP02F-6
WH-OG,1.0,6710
L
Sheet4
C1BP02F-25
BK-GN,2.5,770
G3D140-1
(CC)
BK-GN,2.5,505
W
Sheet3

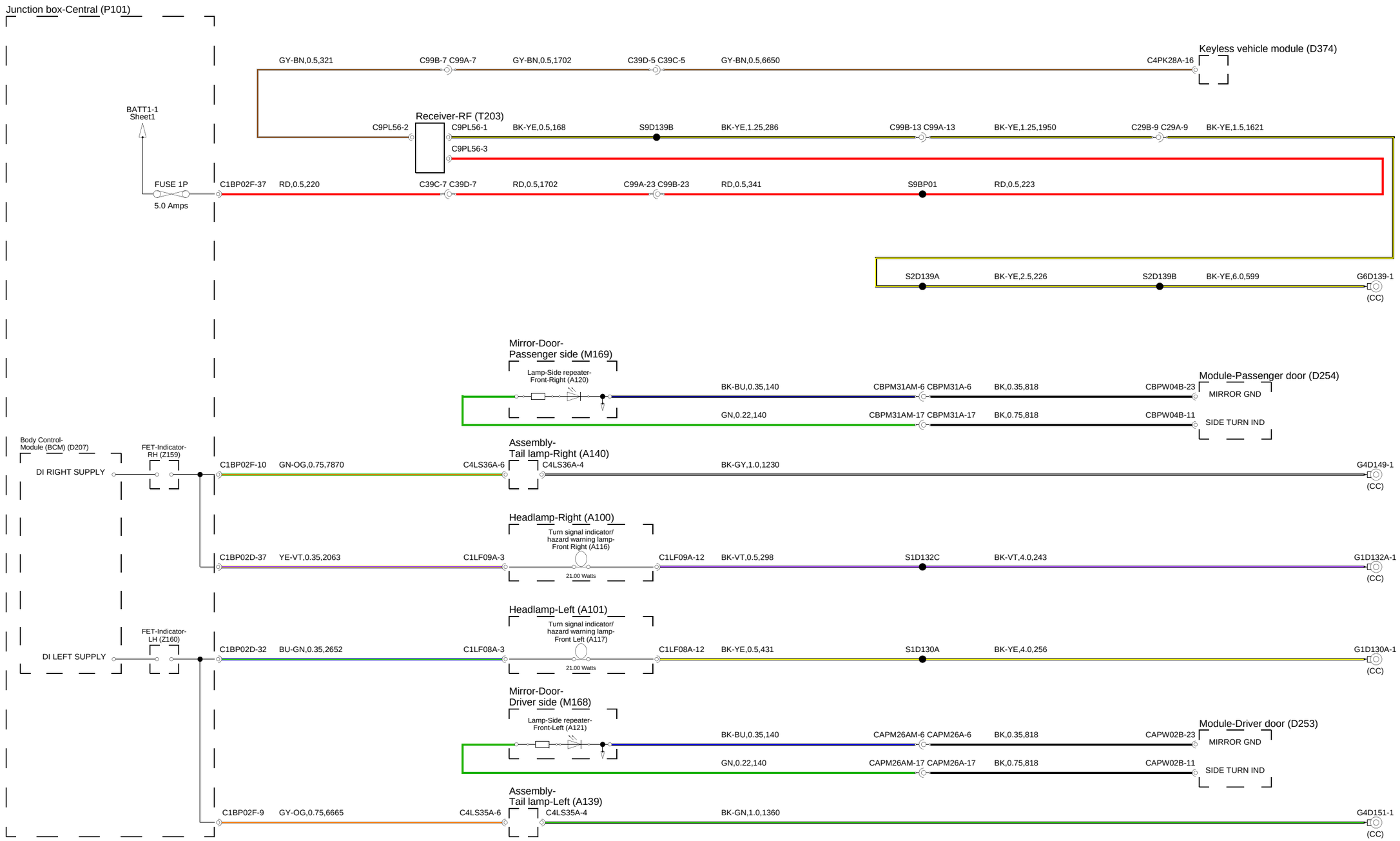
Junction box-Central (P101)
Keyless vehicle module (D374)
GY-BN,0.5,321
C99B-7 C99A-7
GY-BN,0.5,1702
C39D-5 C39C-5
GY-BN,0.5,6650
C4PK28A-16
BATT1-1
Sheet1
Receiver-RF (T203)
C9PL56-2
C9PL56-1
BK-YE,0.5,168
S9D139B
BK-YE,1.25,286
C99B-13 C99A-13
BK-YE,1.25,1950
C29B-9 C29A-9
BK-YE,1.5,1621
C9PL56-3
FUSE 1P
5.0 Amps
C1BP02F-37
RD,0.5,220
C39C-7 C39D-7
RD,0.5,1702
C99A-23 C99B-23
RD,0.5,341
S9BP01
RD,0.5,223
S2D139A
BK-YE,2.5,226
S2D139B
BK-YE,6.0,599
G6D139-1
(CC)
Mirror-Door-
Passenger side (M169)
Lamp-Side repeater-
Front-Right (A120)
BK-BU,0.35,140
CBPM31AM-6 CBPM31A-6
BK,0.35,818
CBPW04B-23
Module-Passenger door (D254)
MIRROR GND
GN,0.22,140
CBPM31AM-17 CBPM31A-17
BK,0.75,818
CBPW04B-11
SIDE TURN IND
Body Control-
Module (BCM) (D207)
FET-Indicator-
RH (Z159)
DI RIGHT SUPPLY
C1BP02F-10
GN-OG,0.75,7870
C4LS36A-6
Assembly-
Tail lamp-Right (A140)
C4LS36A-4
BK-GY,1.0,1230
G4D149-1
(CC)
Headlamp-Right (A100)
Turn signal indicator/
hazard warning lamp-
Front Right (A116)
C1BP02D-37
YE-VT,0.35,2063
C1LF09A-3
21.00 Watts
C1LF09A-12
BK-VT,0.5,298
S1D132C
BK-VT,4.0,243
G1D132A-1
(CC)
Headlamp-Left (A101)
Turn signal indicator/
hazard warning lamp-
Front Left (A117)
FET-Indicator-
LH (Z160)
DI LEFT SUPPLY
C1BP02D-32
BU-GN,0.35,2652
C1LF08A-3
21.00 Watts
C1LF08A-12
BK-YE,0.5,431
S1D130A
BK-YE,4.0,256
G1D130A-1
(CC)
Mirror-Door-
Driver side (M168)
Lamp-Side repeater-
Front-Left (A121)
BK-BU,0.35,140
CAPM26AM-6 CAPM26A-6
BK,0.35,818
CAPW02B-23
Module-Driver door (D253)
MIRROR GND
GN,0.22,140
CAPM26AM-17 CAPM26A-17
BK,0.75,818
CAPW02B-11
SIDE TURN IND
Assembly-
Tail lamp-Left (A139)
C1BP02F-9
GY-OG,0.75,6665
C4LS35A-6
C4LS35A-4
BK-GN,1.0,1360
G4D151-1
(CC)

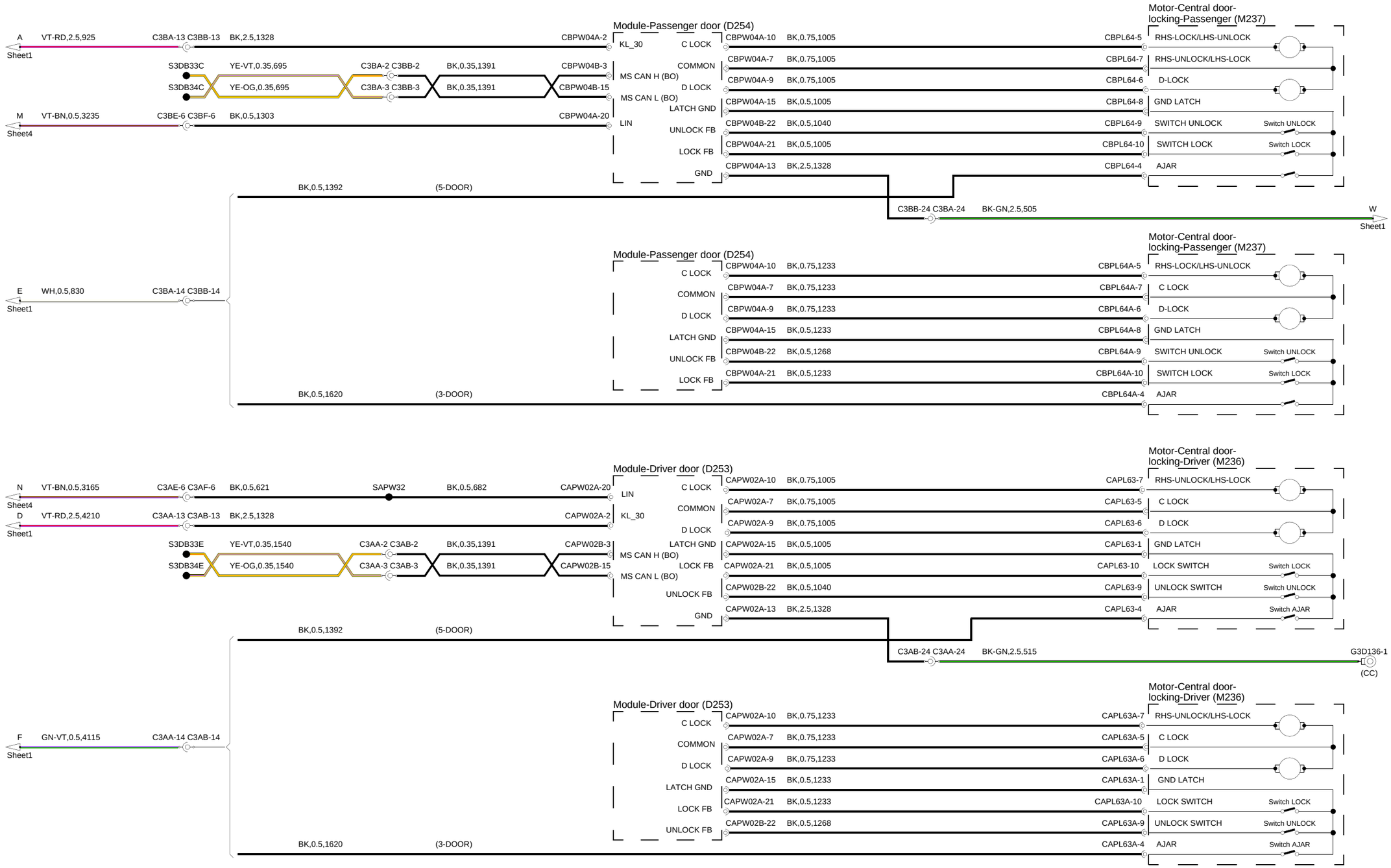
Module-Passenger door (D254)
Motor-Central door-locking-Passenger (M237)
A VT-RD,2.5,925 C3BA-13 C3BB-13 BK,2.5,1328 CBPW04A-2 KL_30
Sheet1
S3DB33C YE-VT,0.35,695 C3BA-2 C3BB-2 BK,0.35,1391 CBPW04B-3 MS CAN H (BO)
S3DB34C YE-OG,0.35,695 C3BA-3 C3BB-3 BK,0.35,1391 CBPW04B-15 MS CAN L (BO)
M VT-BN,0.5,3235 C3BE-6 C3BF-6 BK,0.5,1303 CBPW04A-20 LIN
Sheet4
C LOCK CBPW04A-10 BK,0.75,1005 CBPL64-5 RHS-LOCK/LHS-UNLOCK
COMMON CBPW04A-7 BK,0.75,1005 CBPL64-7 RHS-UNLOCK/LHS-LOCK
D LOCK CBPW04A-9 BK,0.75,1005 CBPL64-6 D-LOCK
LATCH GND CBPW04A-15 BK,0.5,1005 CBPL64-8 GND LATCH
UNLOCK FB CBPW04B-22 BK,0.5,1040 CBPL64-9 SWITCH UNLOCK Switch UNLOCK
LOCK FB CBPW04A-21 BK,0.5,1005 CBPL64-10 SWITCH LOCK Switch LOCK
GND CBPW04A-13 BK,2.5,1328 CBPL64-4 AJAR
BK,0.5,1392 (5-DOOR)
C3BB-24 C3BA-24 BK-GN,2.5,505 W
Sheet1
Module-Passenger door (D254)
Motor-Central door-locking-Passenger (M237)
E WH,0.5,830 C3BA-14 C3BB-14
Sheet1
C LOCK CBPW04A-10 BK,0.75,1233 CBPL64A-5 RHS-LOCK/LHS-UNLOCK
COMMON CBPW04A-7 BK,0.75,1233 CBPL64A-7 C LOCK
D LOCK CBPW04A-9 BK,0.75,1233 CBPL64A-6 D-LOCK
LATCH GND CBPW04A-15 BK,0.5,1233 CBPL64A-8 GND LATCH
UNLOCK FB CBPW04B-22 BK,0.5,1268 CBPL64A-9 SWITCH UNLOCK Switch UNLOCK
LOCK FB CBPW04A-21 BK,0.5,1233 CBPL64A-10 SWITCH LOCK Switch LOCK
BK,0.5,1620 (3-DOOR) CBPL64A-4 AJAR
Module-Driver door (D253)
Motor-Central door-locking-Driver (M236)
N VT-BN,0.5,3165 C3AE-6 C3AF-6 BK,0.5,621 SAPW32 BK,0.5,682 CAPW02A-20 LIN
Sheet4
D VT-RD,2.5,4210 C3AA-13 C3AB-13 BK,2.5,1328 CAPW02A-2 KL_30
Sheet1
S3DB33E YE-VT,0.35,1540 C3AA-2 C3AB-2 BK,0.35,1391 CAPW02B-3 MS CAN H (BO)
S3DB34E YE-OG,0.35,1540 C3AA-3 C3AB-3 BK,0.35,1391 CAPW02B-15 MS CAN L (BO)
C LOCK CAPW02A-10 BK,0.75,1005 CAPL63-7 RHS-UNLOCK/LHS-LOCK
COMMON CAPW02A-7 BK,0.75,1005 CAPL63-5 C LOCK
D LOCK CAPW02A-9 BK,0.75,1005 CAPL63-6 D LOCK
LATCH GND CAPW02A-15 BK,0.5,1005 CAPL63-1 GND LATCH
LOCK FB CAPW02A-21 BK,0.5,1005 CAPL63-10 LOCK SWITCH Switch LOCK
UNLOCK FB CAPW02B-22 BK,0.5,1040 CAPL63-9 UNLOCK SWITCH Switch UNLOCK
GND CAPW02A-13 BK,2.5,1328 CAPL63-4 AJAR Switch AJAR
BK,0.5,1392 (5-DOOR)
C3AB-24 C3AA-24 BK-GN,2.5,515 G3D136-1
(CC)
Module-Driver door (D253)
Motor-Central door-locking-Driver (M236)
F GN-VT,0.5,4115 C3AA-14 C3AB-14
Sheet1
C LOCK CAPW02A-10 BK,0.75,1233 CAPL63A-7 RHS-UNLOCK/LHS-LOCK
COMMON CAPW02A-7 BK,0.75,1233 CAPL63A-5 C LOCK
D LOCK CAPW02A-9 BK,0.75,1233 CAPL63A-6 D LOCK
LATCH GND CAPW02A-15 BK,0.5,1233 CAPL63A-1 GND LATCH
LOCK FB CAPW02A-21 BK,0.5,1233 CAPL63A-10 LOCK SWITCH Switch LOCK
UNLOCK FB CAPW02B-22 BK,0.5,1268 CAPL63A-9 UNLOCK SWITCH Switch UNLOCK
BK,0.5,1620 (3-DOOR) CAPL63A-4 AJAR Switch AJAR

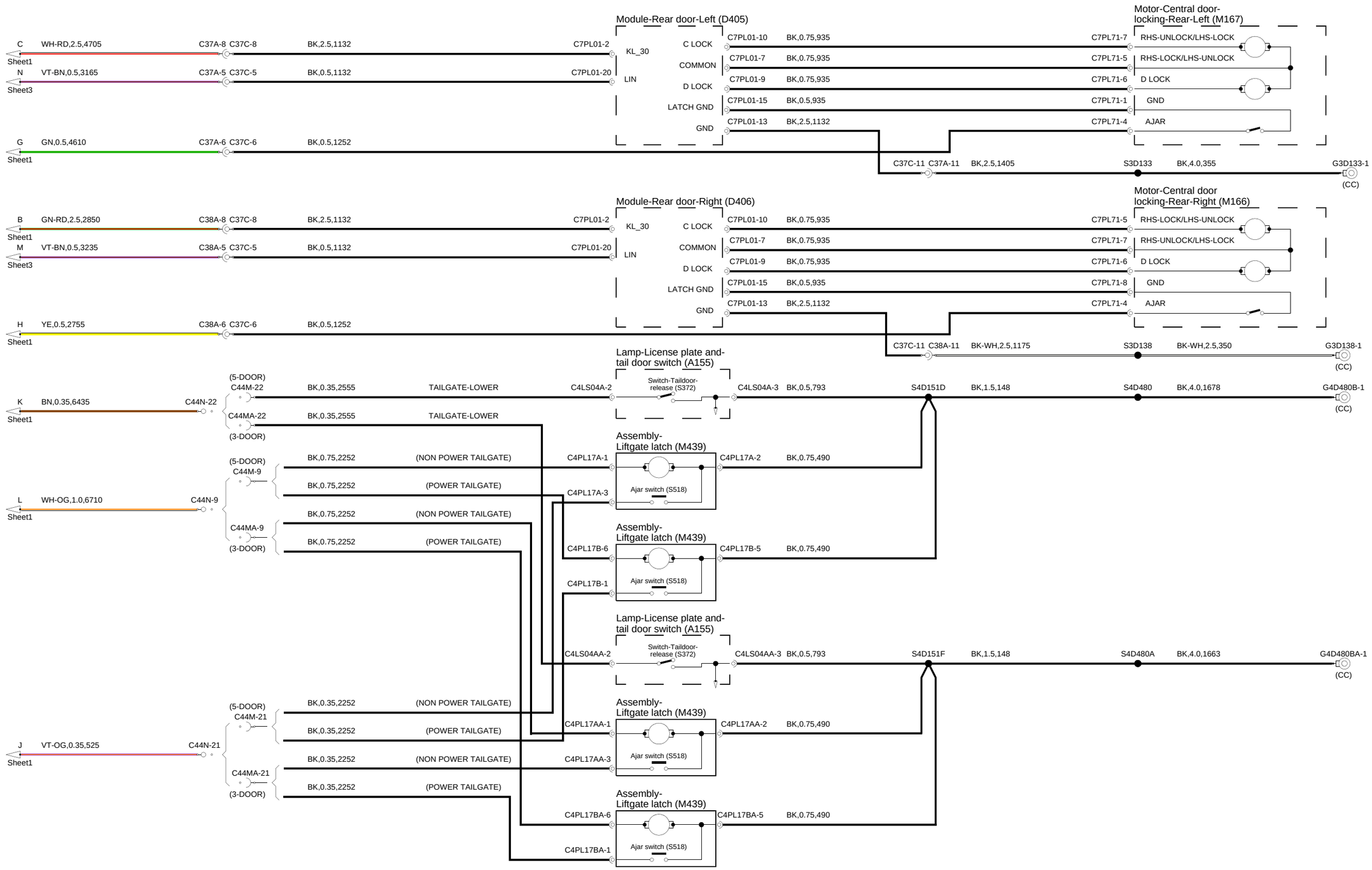
Module-Rear door-Left (D405)
Motor-Central door-locking-Rear-Left (M167)
C WH-RD,2.5,4705 Sheet1
C37A-8 C37C-8 BK,2.5,1132 C7PL01-2
N VT-BN,0.5,3165 Sheet3
C37A-5 C37C-5 BK,0.5,1132 C7PL01-20
KL_30
LIN
C LOCK
COMMON
D LOCK
LATCH GND
GND
C7PL01-10 BK,0.75,935 C7PL71-7 RHS-UNLOCK/LHS-LOCK
C7PL01-7 BK,0.75,935 C7PL71-5 RHS-LOCK/LHS-UNLOCK
C7PL01-9 BK,0.75,935 C7PL71-6 D LOCK
C7PL01-15 BK,0.5,935 C7PL71-1 GND
C7PL01-13 BK,2.5,1132 C7PL71-4 AJAR
G GN,0.5,4610 Sheet1
C37A-6 C37C-6 BK,0.5,1252
C37C-11 C37A-11 BK,2.5,1405 S3D133 BK,4.0,355 G3D133-1 (CC)
Module-Rear door-Right (D406)
Motor-Central door locking-Rear-Right (M166)
B GN-RD,2.5,2850 Sheet1
C38A-8 C37C-8 BK,2.5,1132 C7PL01-2
M VT-BN,0.5,3235 Sheet3
C38A-5 C37C-5 BK,0.5,1132 C7PL01-20
C7PL01-10 BK,0.75,935 C7PL71-5 RHS-LOCK/LHS-UNLOCK
C7PL01-7 BK,0.75,935 C7PL71-7 RHS-UNLOCK/LHS-LOCK
C7PL01-9 BK,0.75,935 C7PL71-6 D LOCK
C7PL01-15 BK,0.5,935 C7PL71-8 GND
C7PL01-13 BK,2.5,1132 C7PL71-4 AJAR
H YE,0.5,2755 Sheet1
C38A-6 C37C-6 BK,0.5,1252
C37C-11 C38A-11 BK-WH,2.5,1175 S3D138 BK-WH,2.5,350 G3D138-1 (CC)
Lamp-License plate and-tail door switch (A155)
Switch-Taildoor-release (S372)
K BN,0.35,6435 Sheet1
C44N-22
(5-DOOR) C44M-22 BK,0.35,2555 TAILGATE-LOWER C4LS04A-2 C4LS04A-3 BK,0.5,793 S4D151D BK,1.5,148 S4D480 BK,4.0,1678 G4D480B-1 (CC)
C44MA-22 BK,0.35,2555 TAILGATE-LOWER (3-DOOR)
Assembly-Liftgate latch (M439)
Ajar switch (S518)
L WH-OG,1.0,6710 Sheet1
C44N-9
(5-DOOR) C44M-9 BK,0.75,2252 (NON POWER TAILGATE) C4PL17A-1 C4PL17A-2 BK,0.75,490
BK,0.75,2252 (POWER TAILGATE) C4PL17A-3
C44MA-9 BK,0.75,2252 (NON POWER TAILGATE)
(3-DOOR) BK,0.75,2252 (POWER TAILGATE) C4PL17B-6 C4PL17B-5 BK,0.75,490
C4PL17B-1
Lamp-License plate and-tail door switch (A155)
C4LS04AA-2 C4LS04AA-3 BK,0.5,793 S4D151F BK,1.5,148 S4D480A BK,4.0,1663 G4D480BA-1 (CC)
J VT-OG,0.35,525 Sheet1
C44N-21
(5-DOOR) C44M-21 BK,0.35,2252 (NON POWER TAILGATE) C4PL17AA-1 C4PL17AA-2 BK,0.75,490
BK,0.35,2252 (POWER TAILGATE)
C44MA-21 BK,0.35,2252 (NON POWER TAILGATE) C4PL17AA-3
(3-DOOR) BK,0.35,2252 (POWER TAILGATE)
C4PL17BA-6 C4PL17BA-5 BK,0.75,490
C4PL17BA-1

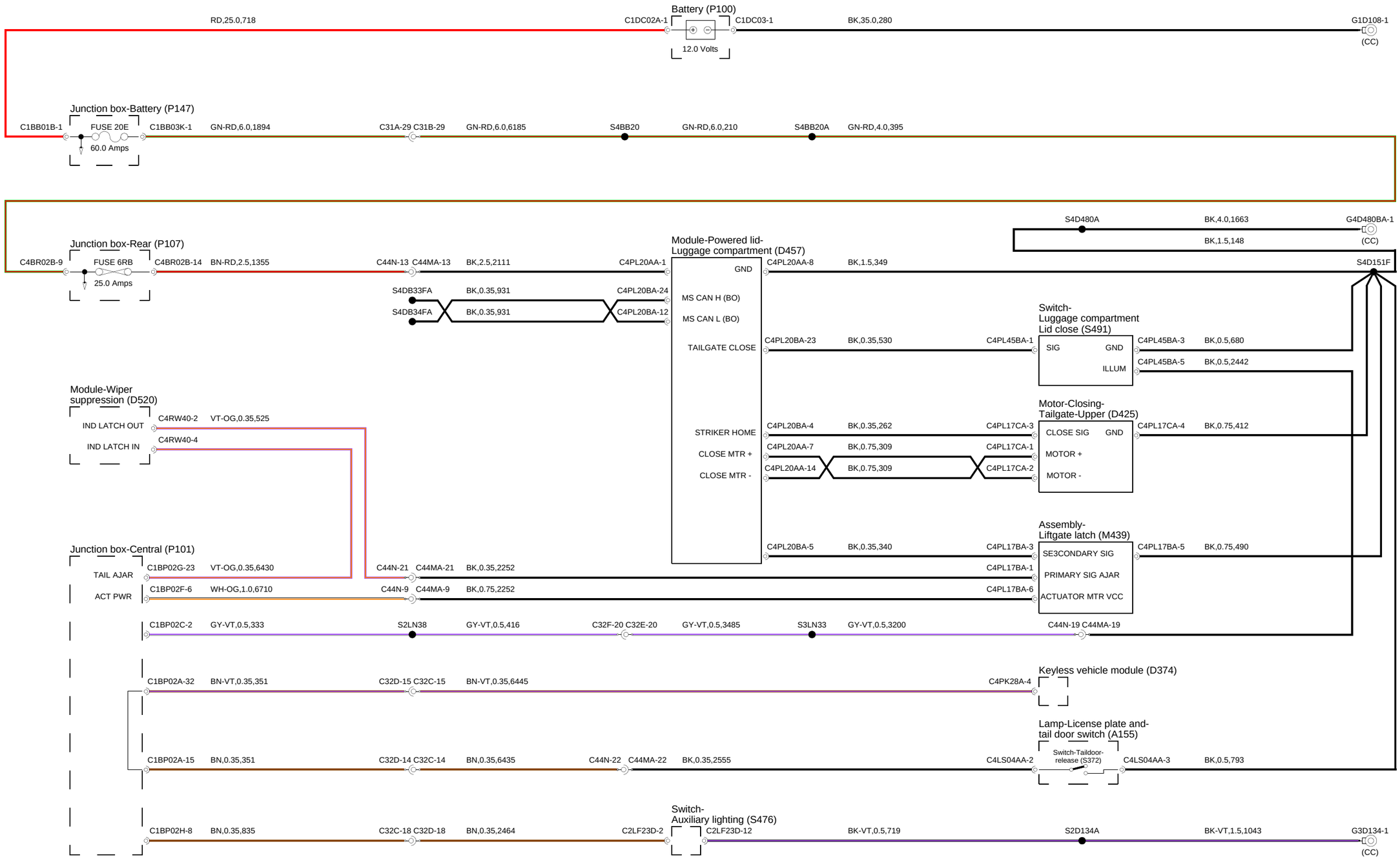
Battery (P100)
RD,25.0,718
C1DC02A-1
C1DC03-1
BK,35.0,280
G1D108-1
(CC)
12.0 Volts
Junction box-Battery (P147)
C1BB01B-1
FUSE 20E
60.0 Amps
C1BB03K-1
GN-RD,6.0,1894
C31A-29 C31B-29
GN-RD,6.0,6185
S4BB20
GN-RD,6.0,210
S4BB20A
GN-RD,4.0,395
S4D480A
BK,4.0,1663
G4D480BA-1
BK,1.5,148
(CC)
Junction box-Rear (P107)
C4BR02B-9
FUSE 6RB
25.0 Amps
C4BR02B-14
BN-RD,2.5,1355
C44N-13 C44MA-13
BK,2.5,2111
C4PL20AA-1
Module-Powered lid-
Luggage compartment (D457)
GND
C4PL20AA-8
BK,1.5,349
S4D151F
S4DB33FA
BK,0.35,931
C4PL20BA-24
MS CAN H (BO)
S4DB34FA
BK,0.35,931
C4PL20BA-12
MS CAN L (BO)
Switch-
Luggage compartment
Lid close (S491)
TAILGATE CLOSE
C4PL20BA-23
BK,0.35,530
C4PL45BA-1
SIG
GND
C4PL45BA-3
BK,0.5,680
ILLUM
C4PL45BA-5
BK,0.5,2442
Module-Wiper
suppression (D520)
IND LATCH OUT
C4RW40-2
VT-OG,0.35,525
IND LATCH IN
C4RW40-4
Motor-Closing-
Tailgate-Upper (D425)
STRIKER HOME
C4PL20BA-4
BK,0.35,262
C4PL17CA-3
CLOSE SIG
GND
C4PL17CA-4
BK,0.75,412
CLOSE MTR +
C4PL20AA-7
BK,0.75,309
C4PL17CA-1
MOTOR +
CLOSE MTR -
C4PL20AA-14
BK,0.75,309
C4PL17CA-2
MOTOR -
Assembly-
Liftgate latch (M439)
Junction box-Central (P101)
C4PL20BA-5
BK,0.35,340
C4PL17BA-3
SE3CONDARY SIG
C4PL17BA-5
BK,0.75,490
TAIL AJAR
C1BP02G-23
VT-OG,0.35,6430
C44N-21 C44MA-21
BK,0.35,2252
C4PL17BA-1
PRIMARY SIG AJAR
ACT PWR
C1BP02F-6
WH-OG,1.0,6710
C44N-9 C44MA-9
BK,0.75,2252
C4PL17BA-6
ACTUATOR MTR VCC
C1BP02C-2
GY-VT,0.5,333
S2LN38
GY-VT,0.5,416
C32F-20 C32E-20
GY-VT,0.5,3485
S3LN33
GY-VT,0.5,3200
C44N-19 C44MA-19
Keyless vehicle module (D374)
C1BP02A-32
BN-VT,0.35,351
C32D-15 C32C-15
BN-VT,0.35,6445
C4PK28A-4
Lamp-License plate and-
tail door switch (A155)
C1BP02A-15
BN,0.35,351
C32D-14 C32C-14
BN,0.35,6435
C44N-22 C44MA-22
BK,0.35,2555
C4LS04AA-2
Switch-Taildoor-
release (S372)
C4LS04AA-3
BK,0.5,793
Switch-
Auxiliary lighting (S476)
C1BP02H-8
BN,0.35,835
C32C-18 C32D-18
BN,0.35,2464
C2LF23D-2
C2LF23D-12
BK-VT,0.5,719
S2D134A
BK-VT,1.5,1043
G3D134-1
(CC)

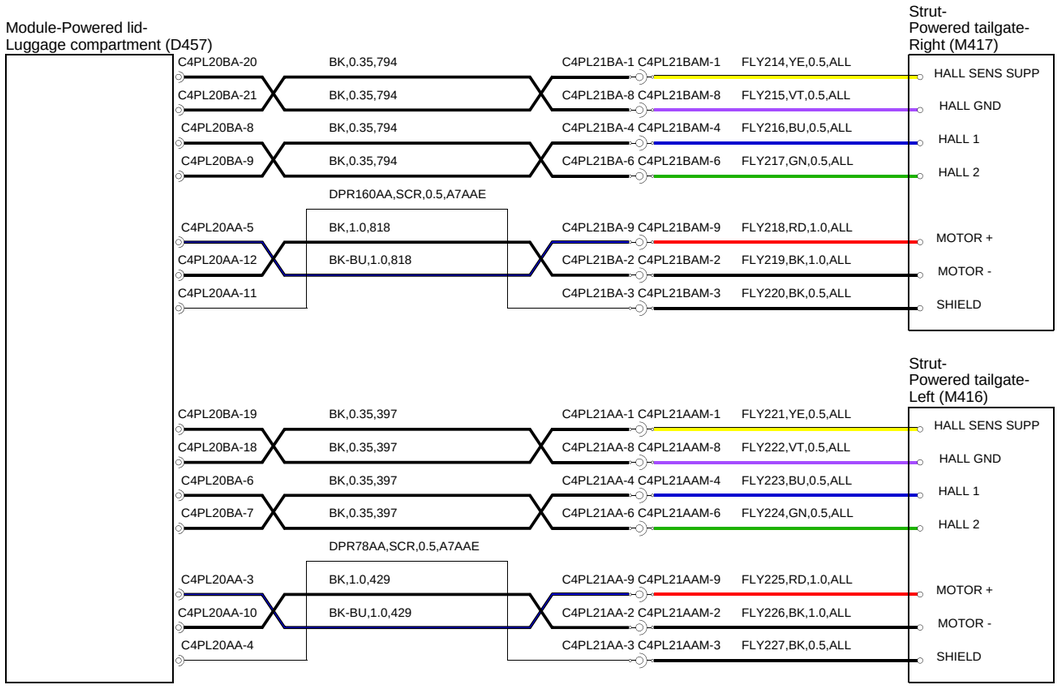
Module-Powered lid-
Luggage compartment (D457)
C4PL20BA-20
BK,0.35,794
C4PL21BA-1 C4PL21BAM-1
FLY214,YE,0.5,ALL
C4PL20BA-21
BK,0.35,794
C4PL21BA-8 C4PL21BAM-8
FLY215,VT,0.5,ALL
C4PL20BA-8
BK,0.35,794
C4PL21BA-4 C4PL21BAM-4
FLY216,BU,0.5,ALL
C4PL20BA-9
BK,0.35,794
C4PL21BA-6 C4PL21BAM-6
FLY217,GN,0.5,ALL
DPR160AA,SCR,0.5,A7AAE
C4PL20AA-5
BK,1.0,818
C4PL21BA-9 C4PL21BAM-9
FLY218,RD,1.0,ALL
C4PL20AA-12
BK-BU,1.0,818
C4PL21BA-2 C4PL21BAM-2
FLY219,BK,1.0,ALL
C4PL20AA-11
C4PL21BA-3 C4PL21BAM-3
FLY220,BK,0.5,ALL
Strut-
Powered tailgate-
Right (M417)
HALL SENS SUPP
HALL GND
HALL 1
HALL 2
MOTOR +
MOTOR -
SHIELD
C4PL20BA-19
BK,0.35,397
C4PL21AA-1 C4PL21AAM-1
FLY221,YE,0.5,ALL
C4PL20BA-18
BK,0.35,397
C4PL21AA-8 C4PL21AAM-8
FLY222,VT,0.5,ALL
C4PL20BA-6
BK,0.35,397
C4PL21AA-4 C4PL21AAM-4
FLY223,BU,0.5,ALL
C4PL20BA-7
BK,0.35,397
C4PL21AA-6 C4PL21AAM-6
FLY224,GN,0.5,ALL
DPR78AA,SCR,0.5,A7AAE
C4PL20AA-3
BK,1.0,429
C4PL21AA-9 C4PL21AAM-9
FLY225,RD,1.0,ALL
C4PL20AA-10
BK-BU,1.0,429
C4PL21AA-2 C4PL21AAM-2
FLY226,BK,1.0,ALL
C4PL20AA-4
C4PL21AA-3 C4PL21AAM-3
FLY227,BK,0.5,ALL
Strut-
Powered tailgate-
Left (M416)
HALL SENS SUPP
HALL GND
HALL 1
HALL 2
MOTOR +
MOTOR -
SHIELD

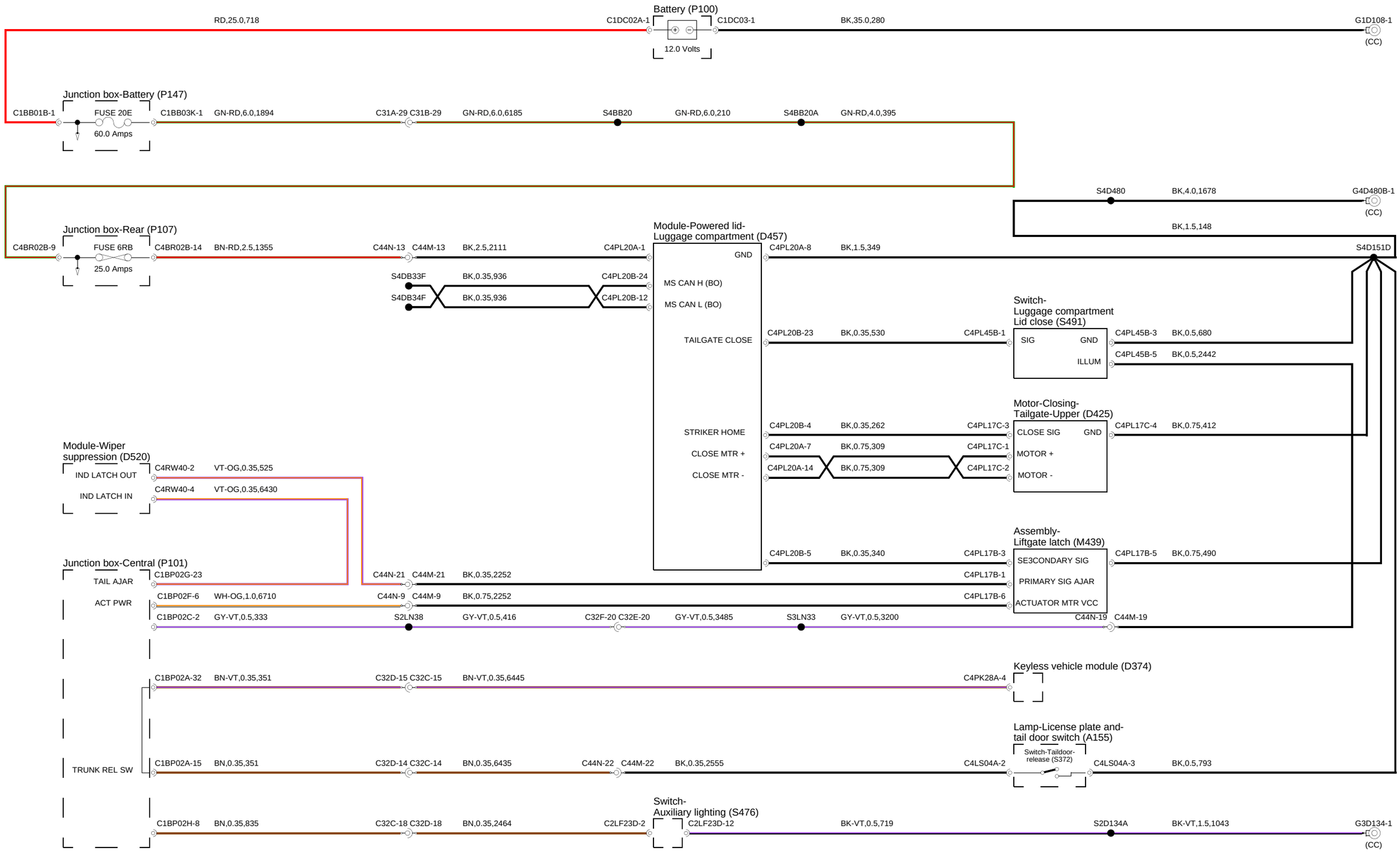
Battery (P100)
RD,25.0,718
C1DC02A-1
C1DC03-1
12.0 Volts
BK,35.0,280
G1D108-1
(CC)
Junction box-Battery (P147)
C1BB01B-1
FUSE 20E
60.0 Amps
C1BB03K-1
GN-RD,6.0,1894
C31A-29 C31B-29
GN-RD,6.0,6185
S4BB20
GN-RD,6.0,210
S4BB20A
GN-RD,4.0,395
S4D480
BK,4.0,1678
G4D480B-1
(CC)
BK,1.5,148
Junction box-Rear (P107)
C4BR02B-9
FUSE 6RB
25.0 Amps
C4BR02B-14
BN-RD,2.5,1355
C44N-13 C44M-13
BK,2.5,2111
C4PL20A-1
Module-Powered lid-
Luggage compartment (D457)
GND
C4PL20A-8
BK,1.5,349
S4D151D
S4DB33F
BK,0.35,936
C4PL20B-24
MS CAN H (BO)
S4DB34F
BK,0.35,936
C4PL20B-12
MS CAN L (BO)
Switch-
Luggage compartment
Lid close (S491)
TAILGATE CLOSE
C4PL20B-23
BK,0.35,530
C4PL45B-1
SIG
GND
C4PL45B-3
BK,0.5,680
ILLUM
C4PL45B-5
BK,0.5,2442
Motor-Closing-
Tailgate-Upper (D425)
STRIKER HOME
C4PL20B-4
BK,0.35,262
C4PL17C-3
CLOSE SIG
GND
C4PL17C-4
BK,0.75,412
CLOSE MTR +
C4PL20A-7
BK,0.75,309
C4PL17C-1
MOTOR +
CLOSE MTR -
C4PL20A-14
BK,0.75,309
C4PL17C-2
MOTOR -
Module-Wiper
suppression (D520)
IND LATCH OUT
C4RW40-2
VT-OG,0.35,525
IND LATCH IN
C4RW40-4
VT-OG,0.35,6430
Assembly-
Liftgate latch (M439)
C4PL20B-5
BK,0.35,340
C4PL17B-3
SE3CONDARY SIG
C4PL17B-5
BK,0.75,490
Junction box-Central (P101)
TAIL AJAR
C1BP02G-23
C44N-21 C44M-21
BK,0.35,2252
C4PL17B-1
PRIMARY SIG AJAR
ACT PWR
C1BP02F-6
WH-OG,1.0,6710
C44N-9 C44M-9
BK,0.75,2252
C4PL17B-6
ACTUATOR MTR VCC
C1BP02C-2
GY-VT,0.5,333
S2LN38
GY-VT,0.5,416
C32F-20 C32E-20
GY-VT,0.5,3485
S3LN33
GY-VT,0.5,3200
C44N-19
C44M-19
Keyless vehicle module (D374)
C1BP02A-32
BN-VT,0.35,351
C32D-15 C32C-15
BN-VT,0.35,6445
C4PK28A-4
Lamp-License plate and-
tail door switch (A155)
Switch-Taildoor-
release (S372)
TRUNK REL SW
C1BP02A-15
BN,0.35,351
C32D-14 C32C-14
BN,0.35,6435
C44N-22 C44M-22
BK,0.35,2555
C4LS04A-2
C4LS04A-3
BK,0.5,793
Switch-
Auxiliary lighting (S476)
C1BP02H-8
BN,0.35,835
C32C-18 C32D-18
BN,0.35,2464
C2LF23D-2
C2LF23D-12
BK-VT,0.5,719
S2D134A
BK-VT,1.5,1043
G3D134-1
(CC)

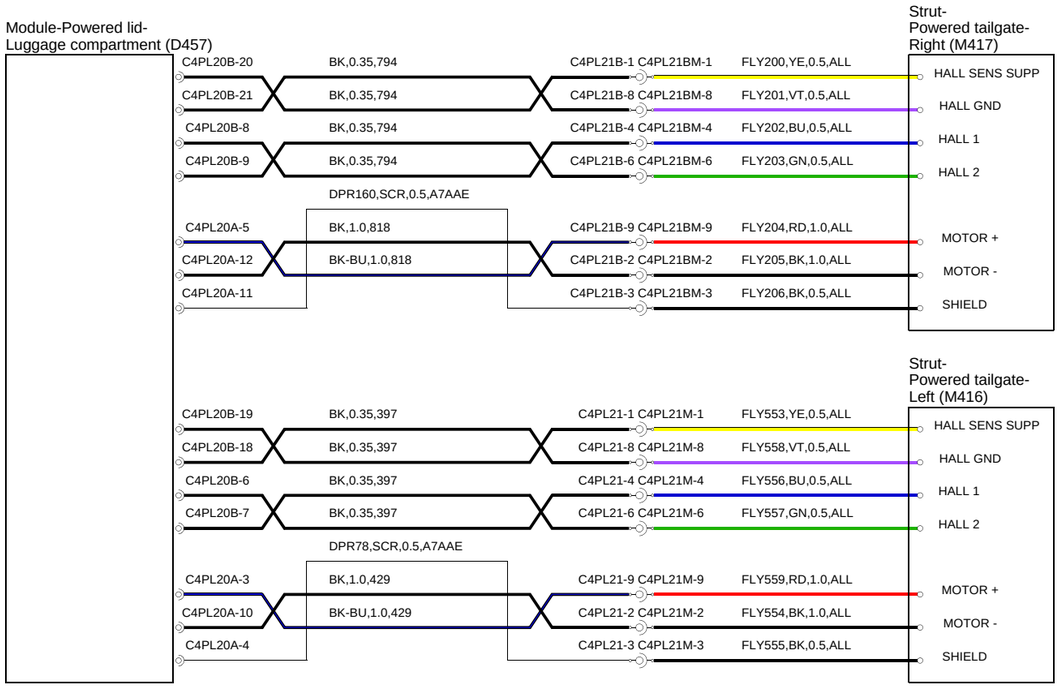
Module-Powered lid-
Luggage compartment (D457)
C4PL20B-20
BK,0.35,794
C4PL21B-1 C4PL21BM-1
FLY200,YE,0.5,ALL
C4PL20B-21
BK,0.35,794
C4PL21B-8 C4PL21BM-8
FLY201,VT,0.5,ALL
C4PL20B-8
BK,0.35,794
C4PL21B-4 C4PL21BM-4
FLY202,BU,0.5,ALL
C4PL20B-9
BK,0.35,794
C4PL21B-6 C4PL21BM-6
FLY203,GN,0.5,ALL
DPR160,SCR,0.5,A7AAE
C4PL20A-5
BK,1.0,818
C4PL21B-9 C4PL21BM-9
FLY204,RD,1.0,ALL
C4PL20A-12
BK-BU,1.0,818
C4PL21B-2 C4PL21BM-2
FLY205,BK,1.0,ALL
C4PL20A-11
C4PL21B-3 C4PL21BM-3
FLY206,BK,0.5,ALL
Strut-
Powered tailgate-
Right (M417)
HALL SENS SUPP
HALL GND
HALL 1
HALL 2
MOTOR +
MOTOR -
SHIELD
C4PL20B-19
BK,0.35,397
C4PL21-1 C4PL21M-1
FLY553,YE,0.5,ALL
C4PL20B-18
BK,0.35,397
C4PL21-8 C4PL21M-8
FLY558,VT,0.5,ALL
C4PL20B-6
BK,0.35,397
C4PL21-4 C4PL21M-4
FLY556,BU,0.5,ALL
C4PL20B-7
BK,0.35,397
C4PL21-6 C4PL21M-6
FLY557,GN,0.5,ALL
DPR78,SCR,0.5,A7AAE
C4PL20A-3
BK,1.0,429
C4PL21-9 C4PL21M-9
FLY559,RD,1.0,ALL
C4PL20A-10
BK-BU,1.0,429
C4PL21-2 C4PL21M-2
FLY554,BK,1.0,ALL
C4PL20A-4
C4PL21-3 C4PL21M-3
FLY555,BK,0.5,ALL
Strut-
Powered tailgate-
Left (M416)
HALL SENS SUPP
HALL GND
HALL 1
HALL 2
MOTOR +
MOTOR -
SHIELD